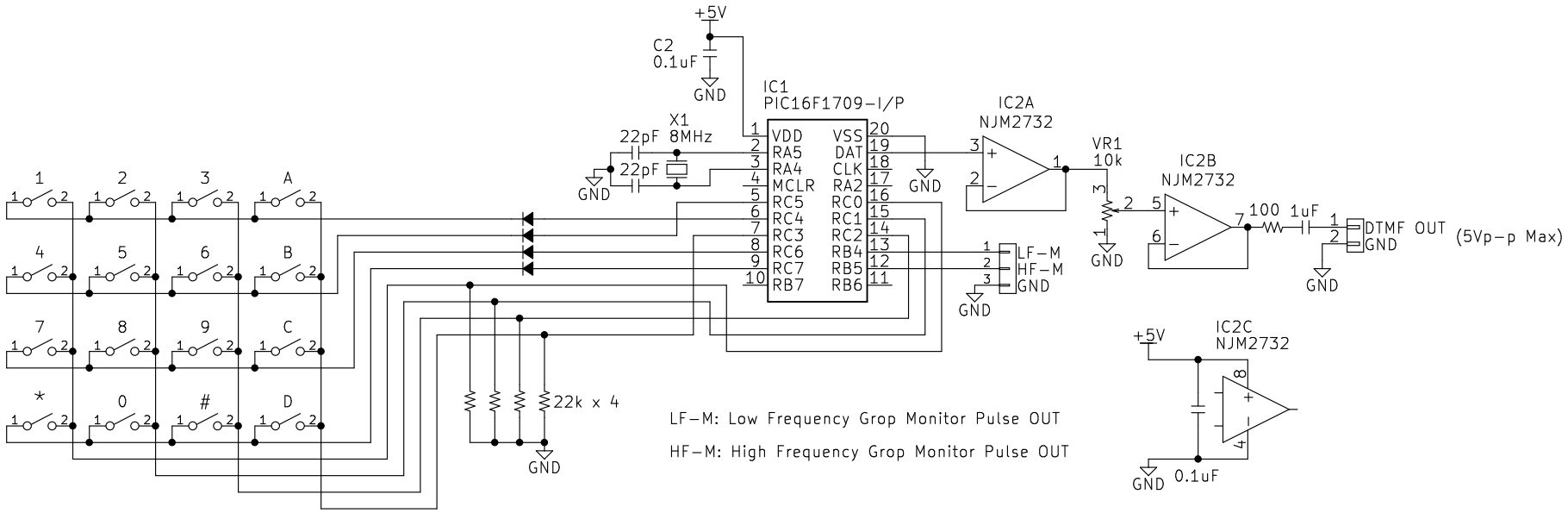

Sheet: / File: DTMF_Mtrix_1709.sch		
Title:		
Size: A4	Date:	**Rev:** Id: 1/1